TOP VIEW

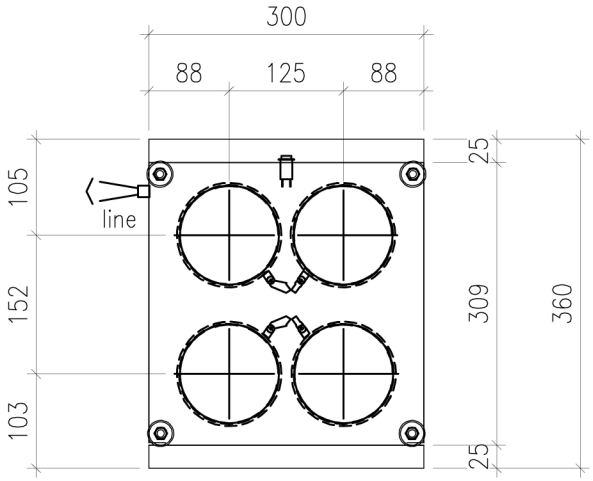

ISOMETRIC

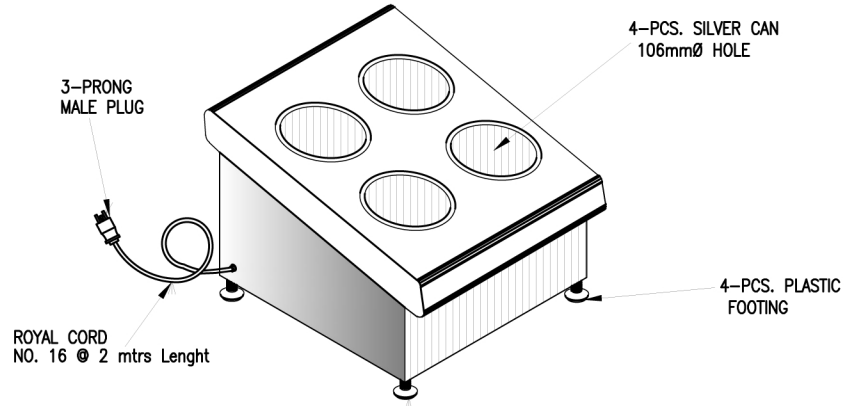

FRONT VIEW

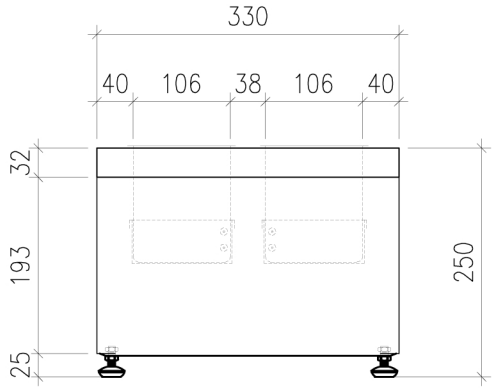

SECTION

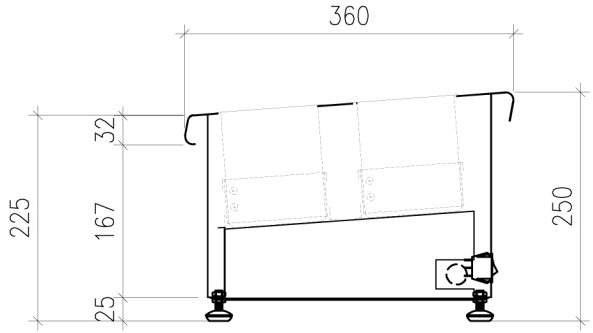

GENERAL SPECIFICATIONS : ☑

1.	16 GA SS TOP PLATE
2.	20 GA SS BODY
3.	20 GA SS CONTROL PANEL
4.	20 GA SS INTERIOR INSULATION PLATE
5.	¾ø SS.NUT
6.	PLASTIC FOOTING
7.	4pcs. 10W BAND HEATER
8.	LIGHTED SWITCH 10A
9.	TERMINAL BLOCK 6T
10.	MALE PLUG 3 PRONG
11.	ROYAL CORD #16

GENERAL SPECIFICATIONS : ☐

8.	
9.	
10.	
11.	
12.	
13.	
14.	
15.	
16.	
17.	

DRAWING REVIEW

Submission Date:

- ☐ APPROVED
- ☐ APPROVED SUBJECT TO COMMENTS RESUBMISSION NOT REQUIRED
- ☐ NOT APPROVED,RESUBMIT AS NOTED

Approved by _____

Date returned to contractor _____

JFC approvals apply to method of construction and material specification only. Contractor is responsible to ensure all dimensions are verified to suit site conditions and fabricated accordingly.

PROJECT	STANDARD UNIT		
ITEM	03	SS SILVER CADDY- 4 HOLES	
Project Ref #	–	Date	
Designed by	–	Revision	–
Drawn by		Rev. Date	–
Verified by	–	Scale	NTS.
Approved by	–	Quanlity	1